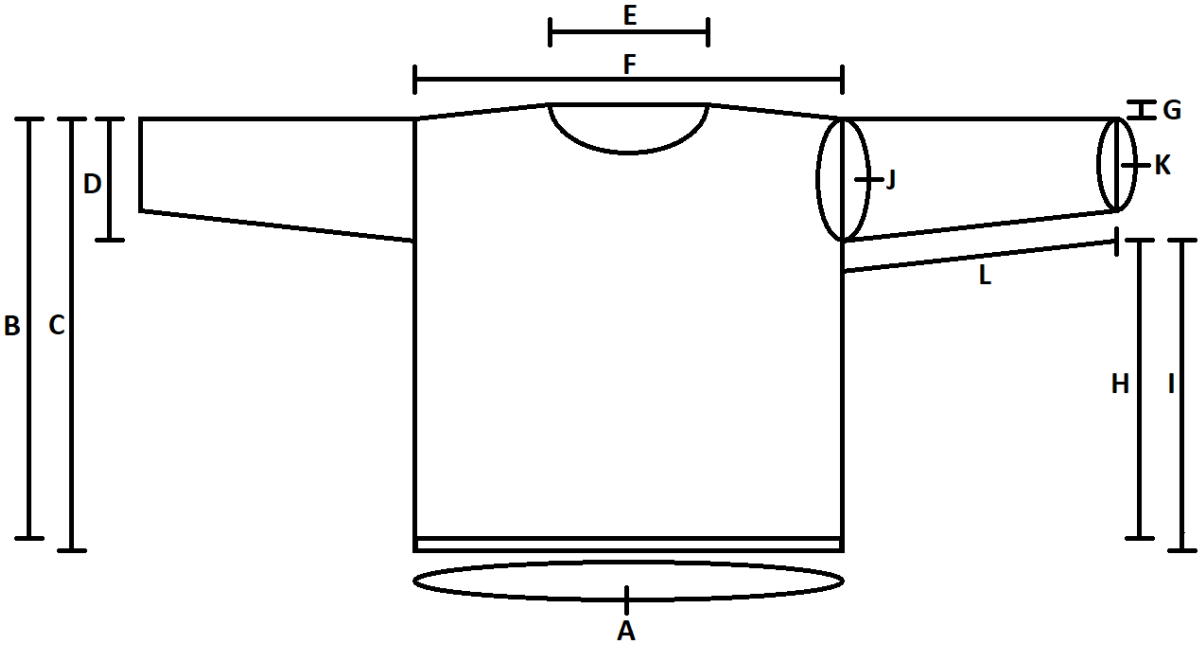

	Size	1	2	3	4	5	6	7	8	9	10	
A	Finished chest	31.25	35.75	38.75	43.5	48	51	55.5	60.25	63.25	67.75	in
B	Front length	23.5	24	24.25	24.5	24.75	25	25	25.5	25.5	25.5	in
C	Back length	24.5	25	25.25	25.5	25.75	26	26	26.5	26.5	26.5	in
D	Armhole depth	6	6.5	7	7.5	8	9	9.75	10.5	11	11.5	in
E	Back neck width	7.5	7.5	8	8	8.5	8.75	8.75	9.25	9.5	9.5	in
F	Shoulder width	15.25	17.5	19	21.25	23.5	25.25	27.5	29.75	31.25	33.5	in
G	Shoulder drop	1.75	1.75	1.75	1.75	1.75	1.75	1.75	1.75	1.75	1.75	in
H	Front length to armhole	16	16.5	16.75	17	17.25	17.5	17.5	18	18	18	in
I	Back length to armhole	17	17.5	17.75	18	18.25	18.5	18.5	19	19	19	in
J	Sleeve circumference	11.75	12.25	13	14	15.5	17.5	19	20.5	21.25	22.5	in
K	Wrist circumference	6	6.75	6.75	7.5	7.5	8.5	8.5	9.25	9.25	9.25	in
L	Sleeve length	18	18	18	18	18	18	18	18	18	18	in